3RD ANGLE PROJECTION

REVISIONS								
CC	REV	DESCRIPTION	AUT	DATE	CHK'D	TC	MFG	REG
01	A	B-MODEL PROTOTYPE.	V. BEAUVAIS	2006-04-11				
01	B	ADDED POP-RIVET HOLES TO TOP & BOTTOM FLANGES.	V. BEAUVAIS	2006-05-04				
01	C	C-MODEL DESIGN.	V. BEAUVAIS	2006-08-25	C. KNOWLES	E. SERBAN	M. DIMAGGIO	R. McDIARMID
01	D	ADDED 1-1/4 (44.5 DIA) EKO. REPOSITIONED NEARBY EKO.	V. BEAUVAIS	2006-09-29				
01	E	ECO 5613: MOVED KEYHOLE KNOCKOUTS UP 1.0 mm. REVISED EKO DIAMETERS.	V. BEAUVAIS	2006-10-05				
01	F	ECO 5921: CHANGED TO GALVANEAL, LENGTHENED TOP FLANGE, ADDED HOLES, REVISED EKO DIAMETERS & DIRECTIONS.	V. BEAUVAIS	2007-02-13	D. MILLER	E. SERBAN	M. DIMAGGIO	R. McDIARMID

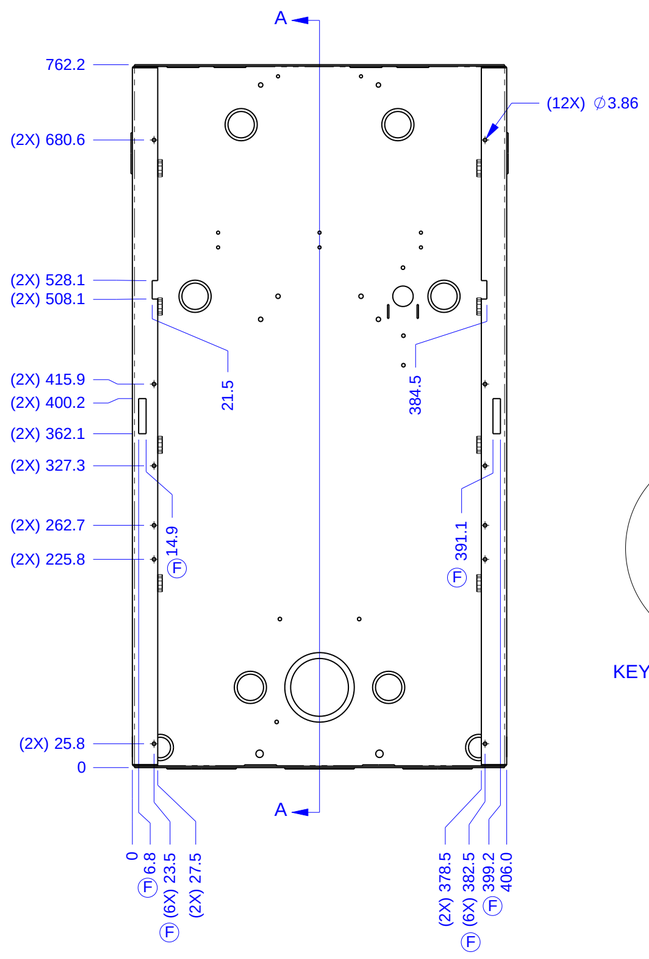

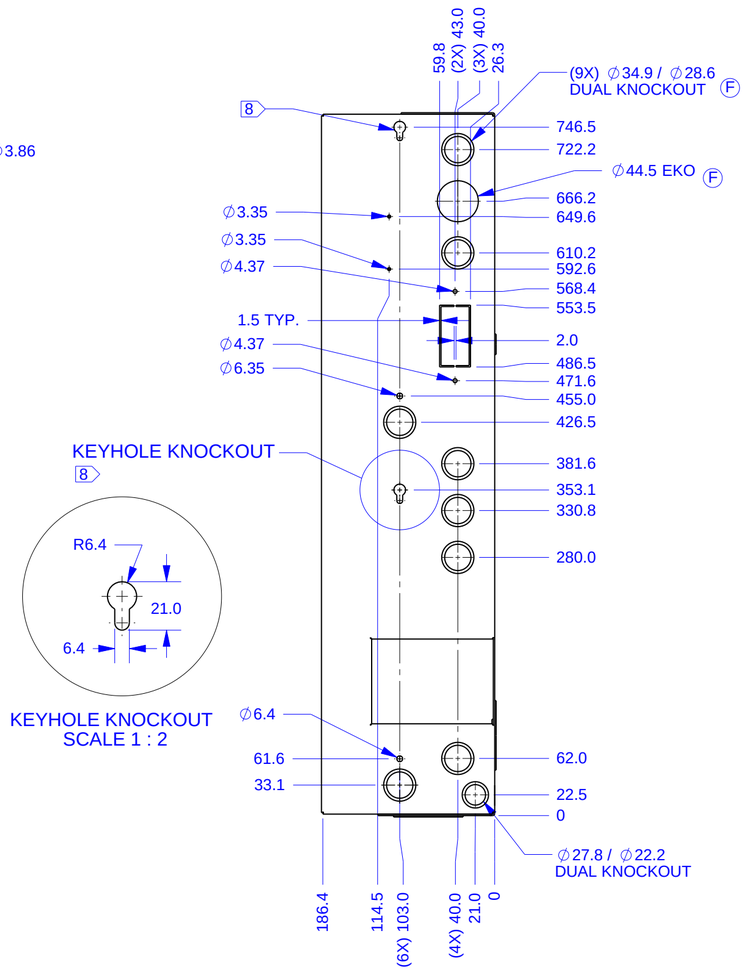

KEYHOLE KNOCKOUT
SCALE 1 : 2

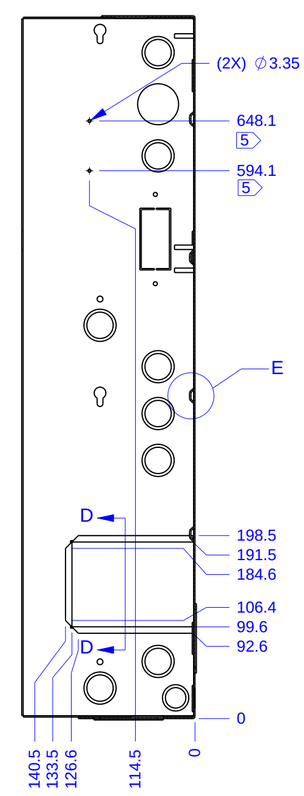

SECTION A-A

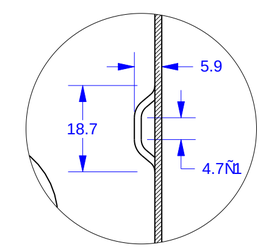

DETAIL E
SCALE 1 : 1

TYP., 8 PLACES

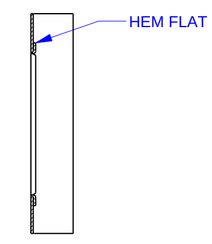

SECTION D-D
SCALE 1 : 3

NOTES:

1. MATERIAL: 16 GA (1.5 mm THICK) GALVANEAL.
2. INTERNAL BEND RADIUS 0.8 MM.
3. ALL BENDS 90° UNLESS OTHERWISE NOTED.
4. HIDDEN LINES REMOVED FOR DRAWING CLARITY.
5. LEFT AND RIGHT SIDES SYMMETRIC EXCEPT FOR THESE DIMENSIONS.
6. DIMPLE: FOR POSITIONING OF XANTREX PARTS 210-0789-01-01, 210-0790-01-01, AND 210-0804-01-01. APPROX 6.0 DIAMETER, 1.8 HIGH.
7. CLEARANCE HOLE FOR POP-RIVET. CLEARANCE HOLE MUST OVERLAP POP-RIVET HOLE AFTER FORMING.
8. KEYHOLE KNOCKOUT, 4 PLACES, MATERIAL INSIDE.
9. FINISH: NONE.

CONFIDENTIAL INFORMATION OF XANTREX INTERNATIONAL.
COPYRIGHT 2004 XANTREX INTERNATIONAL. THIS DOCUMENT IS THE PROPERTY OF XANTREX INTERNATIONAL, AND SHALL NOT BE REPRODUCED, COPIED, OR USED AS THE BASIS FOR THE MANUFACTURE OR SALE OF EQUIPMENT, WITHOUT THE EXPRESS WRITTEN PERMISSION OF: XANTREX INTERNATIONAL.

TOLERANCES: (UNLESS OTHERWISE SHOWN)	X.X	X.XX	ANGLES
	± 0.3	± 0.13	± 0.5°

xantrex™

TITLE: CHASSIS DISTRIBUTION PANEL XW

DIMENSIONS ARE IN MILLIMETERS UNLESS OTHERWISE SHOWN

AUT	V. BEAUVAIS	2005-01-05	SIZE C
DES	V. BEAUVAIS	2005-01-05	SCALE 1:5

DWG No. 210-0567-01-01 REV. F

SHT 1 OF 2

3RD ANGLE PROJECTION

REVISIONS: SEE SHEET 1

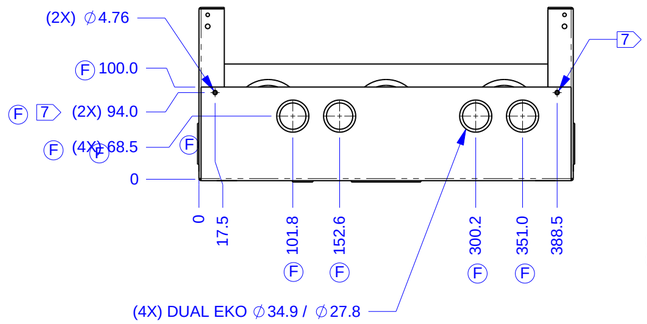

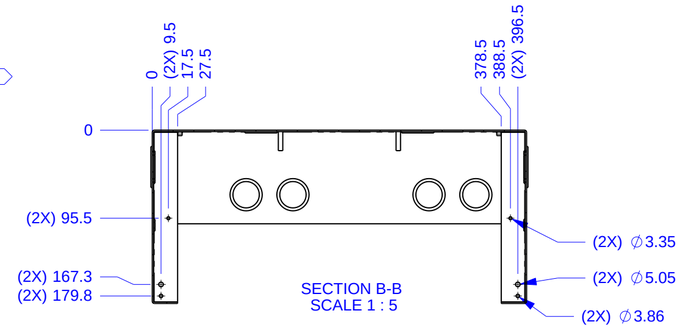

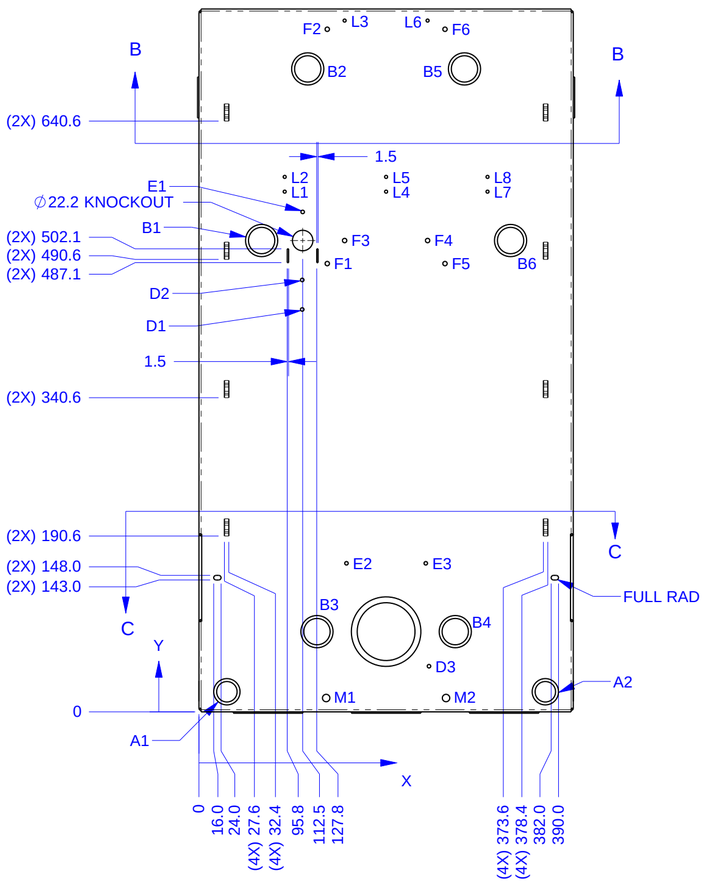

TAG	X LOC	Y LOC	SIZE	
A1	30.30	21.80	∅27.8 / ∅22.2 DUAL KNOCKOUT	(F)
A2	375.70	21.80	∅27.8 / ∅22.2 DUAL KNOCKOUT	(F)
B1	68.00	511.10	∅34.9 / ∅27.8 DUAL KNOCKOUT	(F)
B2	118.00	697.20	∅34.9 / ∅27.8 DUAL KNOCKOUT	(F)
B3	128.00	87.00	∅34.9 / ∅27.8 DUAL KNOCKOUT	(F)
B4	278.00	87.00	∅34.9 / ∅27.8 DUAL KNOCKOUT	(F)
B5	288.00	697.20	∅34.9 / ∅27.8 DUAL KNOCKOUT	(F)
B6	338.00	511.10	∅34.9 / ∅27.8 DUAL KNOCKOUT	(F)
D1	112.00	436.35	∅3.86 THRU	
D2	112.00	468.35	∅3.86 THRU	
D3	249.50	49.50	∅3.86 THRU	
E1	112.50	542.10	∅3.86 THRU	
E2	160.00	161.10	∅3.86 THRU	
E3	246.00	161.10	∅3.86 THRU	
F1	139.15	486.10	INSTALL PEM FH-032-14	
F2	139.15	740.20	INSTALL PEM FH-032-14	
F3	158.00	511.10	INSTALL PEM FH-032-14	
F4	248.00	511.10	INSTALL PEM FH-032-14	
F5	266.85	486.10	INSTALL PEM FH-032-14	
F6	266.85	740.20	INSTALL PEM FH-032-14	
L1	93.00	564.10	∅3.35 THRU	(F)
L2	93.00	580.10	∅3.35 THRU	(F)
L3	158.00	749.60	∅3.35 THRU	(F)
L4	203.00	564.10	∅3.35 THRU	(F)
L5	203.00	580.10	∅3.35 THRU	(F)
L6	248.00	749.60	∅3.35 THRU	(F)
L7	313.00	564.10	∅3.35 THRU	(F)
L8	313.00	580.10	∅3.35 THRU	(F)
M1	138.00	15.00	∅8.10 THRU	(F)
M2	268.00	15.00	∅8.10 THRU	(F)

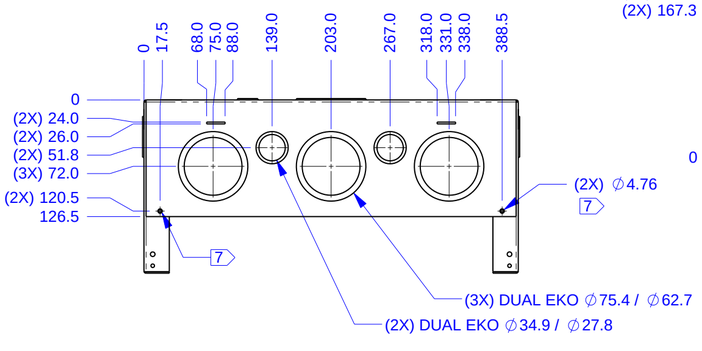

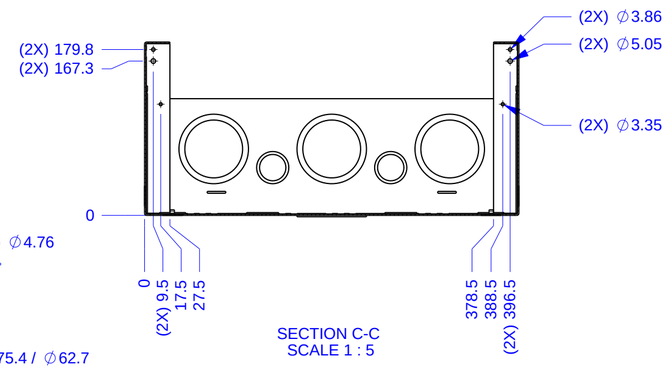

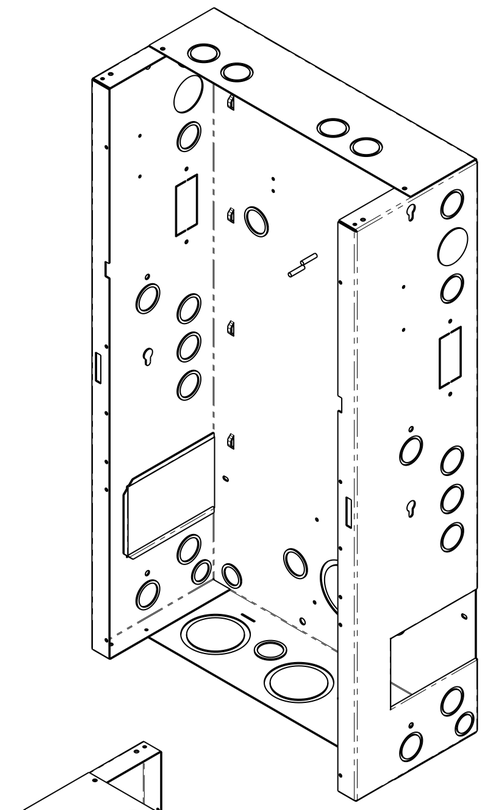

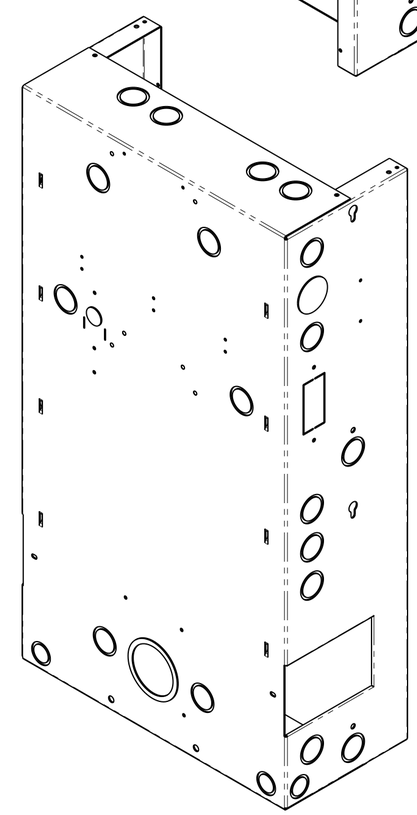

TITLE: CHASSIS DISTRIBUTION PANEL XW

DIMENSIONS ARE IN MILLIMETERS UNLESS OTHERWISE SHOWN

xantrex™

SIZE C | SCALE 1:4 | DWG No. 210-0567-01-01 | REV. F | SHT 2 OF 2